COMBiLiFT
LiFTING INNOVATION

COMBi-CBC







Incorporating patent pending hydraulic steering system, enhanced to provide carousel steering in both directions during sideways travel, delivering reliability with a modern edge.

combilift.com

COMBi-CBC

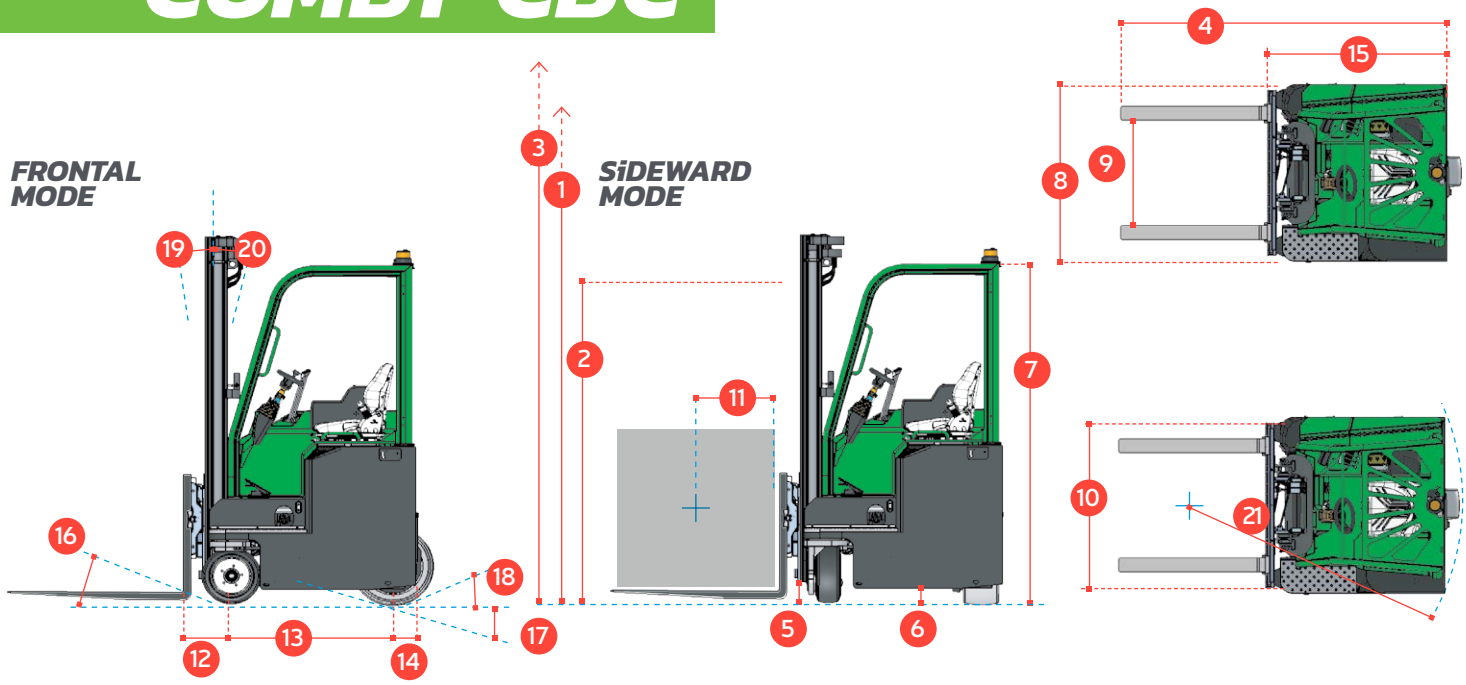

Ref.	Description	Std	Optional		
		DUPLEX	DUPLEX	DUPLEX	TRIPLEX
1 a	Standard Lift Height	4000mm	4550 mm	5050 mm	5500 mm
1 b	Free Lift Height	0 mm	1980 mm	2230 mm	1481 mm
2	Height Mast Closed	2610 mm	2910 mm	3160 mm	2410 mm
3	Max. (Mast raised)	4900 mm	5450 mm	5950 mm	6400 mm
4	Overall Length	2640 mm			
5	Ground Clearance Under Mast	125 mm			
6	Ground Clearance at Rear Corner	130 mm			
7	Height of Overhead Guard	2400 mm			
8	Width	1500 mm			
9	Outside Spread of Fork Arms	1325 mm			
10	Track Front	1186 mm			
11	Load Centre Distance	600 mm			
12	Overhang Front	320 mm			
13	Wheelbase	1098 mm			
14	Overhang Back	208 mm			
15	Length From Face of Fork	1585 mm			
16	Approach Angle	30°			
17	Ramp Angle	15°			
18	Departure Angle	30°			
19	Forward Tilt	3°			
20	Backward Tilt	5°			
21	Minimum Outside Radius	1400 mm			

A	Capacity	3000 kg
B	Unladen Weight	6750 kg
C	Maximum Ground Speed	12 km/h
D	Gradeability	10%
E	Battery Capacity	48 V / 930 Ah
F	AC Electric Traction Motor x 2	48 V / 8.7 kW
G	AC Electric Pump Motor	48 V / 14 kW
H	Fork Section	125 mm x 50 mm x 1065 mm
I	16 x 7 – 10.5 Front Tyre x 2	OD 406 mm / Width 178 mm
J	22 x 10 x 16 Rear Tyre x 1	OD 559 mm / Width 254 mm
K	Standard Colour	Eco Green and Grey
L	Suspension Seat	Grammer MSG 65

Features Include:

- Ergonomic Suspended cabin
- Gas Strut Assisted Tilting Cabin for service access.
- Multi-directional operation
- Powered by AC technology
- Centrally Positioned Operator
- 2 Interchangeable Rolling Batteries
- Hydraulic Steering

2 Interchangeable Rollout Batteries

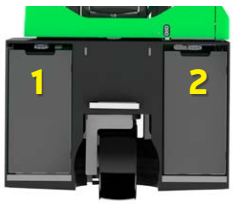



Design Copyright No. 015019216-0002
Design Copyright Application No. 015152557
Patent Pending No. PCT/EP2025/083632
European Patent No. 2956350
Chinese Patent No. ZL201480009365.9
US Patent No. 9,561,946

CO. MONAGHAN
IRELAND
+353 47 80500
INFO@COMBILIFT.COM
combilift.com